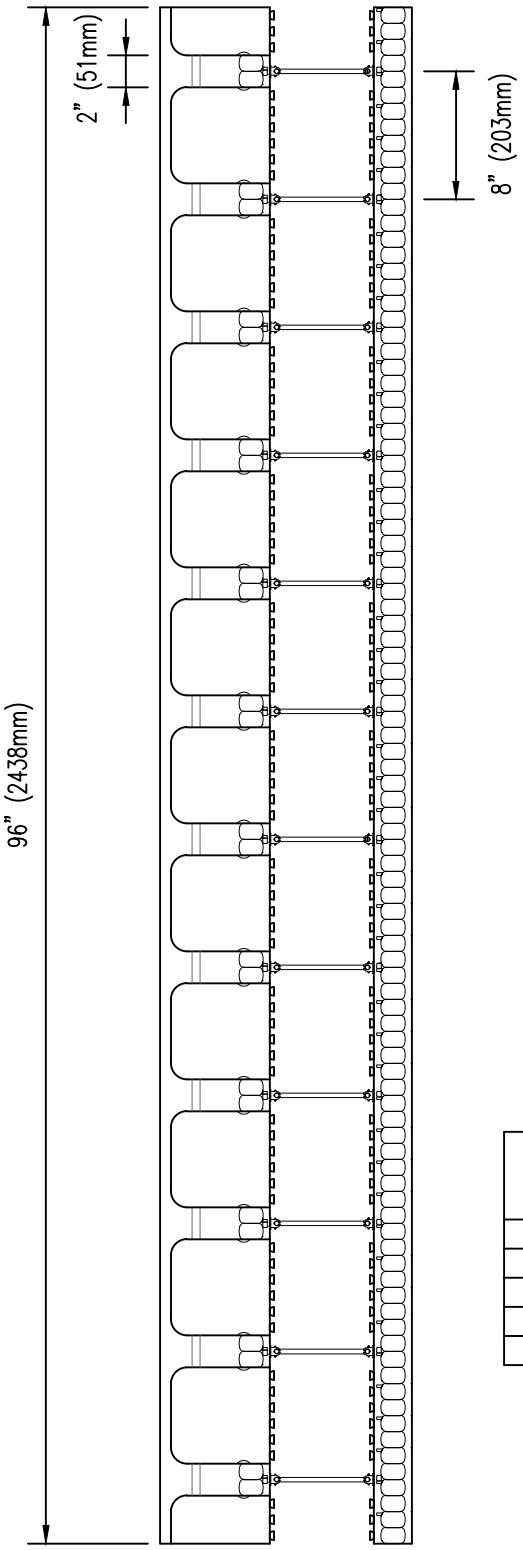

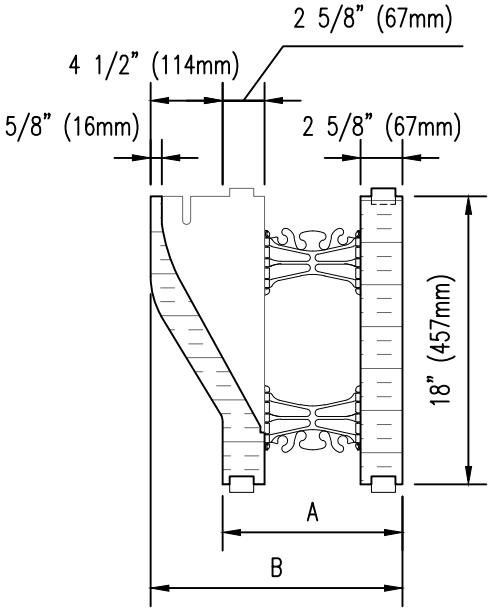

NOMINAL CONCRETE CORE	DIMENSION	
	A	B
4" (100mm)	9 1/4" (235mm)	13 3/4" (349mm)
6" (150mm)	11 1/4" (286mm)	15 3/4" (400mm)
8" (200mm)	13 1/4" (337mm)	17 3/4" (451mm)
10" (250mm)	15 1/4" (387mm)	19 3/4" (502mm)
12" (300mm)	17 1/4" (438mm)	21 3/4" (552mm)

NOTE: PRODUCT LENGTH SUBJECT TO REGIONAL AVAILABILITY IN 4' (1219mm) OR 8' (2438mm) LENGTHS

The architecture, engineering, and design of the project using the Nudura products are the responsibility of the project's design professional. All products and systems must comply with local building codes and standards. This detail is for general information and guidance only and Nudura specifically disclaims any liability for the use of this detail. The project design professional determines, in its sole discretion, whether this detail or a functionally equivalent detail is best suited for the project. This detail is subject to change without notice. Contact Nudura to ensure you have the most recent version.

Nudura Form Unit Details

Nudura
www.nudura.com
Nudura Technical Support: 866-468-6299
International: +1 705-726-9499

Detail: Nudura Brick Ledge Form Unit			File Name: A-6
Drawn by: J.N / N.L	Scale: NTS	Date: 10/28/2021	

TREMCO
Construction Products Group